PTx Trimble

Field-IQ Spreader
Rate and Section Control

99105-10
Pull Type Spreader with Existing Valve

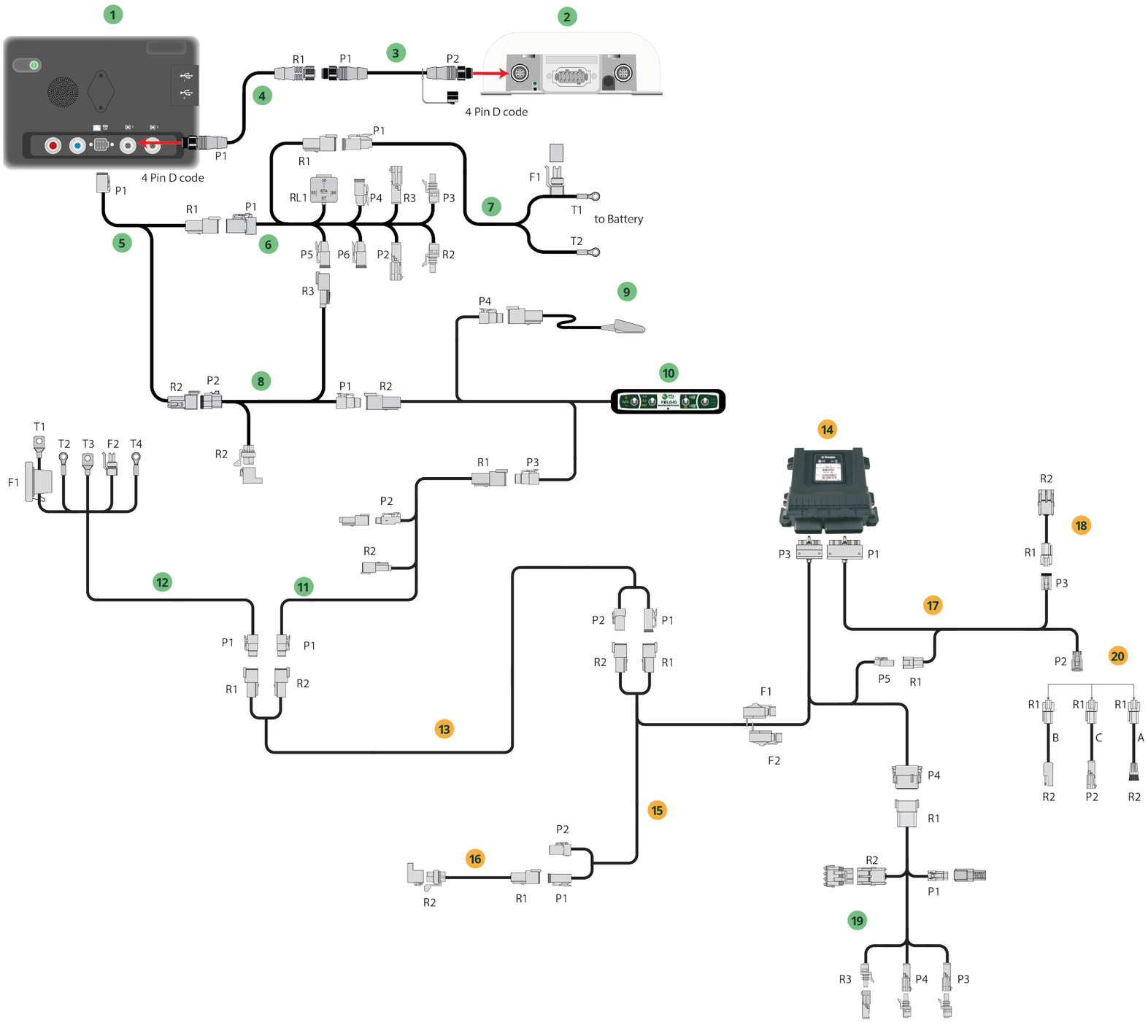

GFX Display System Cabling		
Item	**Description**	**P/N**
1	GFX series displays with PIQ app	
2	NAV-900 or NAV-960 guidance controller	
3	Cable Assy, GFX to NAV-500/900, Power/Ethernet (BRR), 5 m	110540
4	Cable Assy, GFX to NAV-500/900, Power/Ethernet (BRR) Extension, 2.5 m. Optional extension for large vehicles.	112082
5	Cable Assy, GFX, Power to display, CAN, 2.5 m	110551
6	Cable Assy, GFX/CFX/FMX Power with Relay and Switch (Acc)	67259
7	Cable Assy, GFX/CFX/FMX/Basic Power, 4 m	67258
8	Cable Assy, GFX, Field-IQ, Active CAN terminator	111083
9	*Optional:* Foot Switch	78150

Field-IQ Spreader Cabling (99105-10)		
Item	**Description**	**P/N**
10	*Optional:* Field-IQ Master switch box	80800-00
11	Cab to hitch CAN cable	77368
12	Power to cab cable	76941
13	CAN/Power extension cable	75528-xx
14	Rate and Section Control Module	75774-01
15	Power/CANbus harness	75526
16	Field-IQ imlement terminator adapter	75529
17	Field-IQ universal spreader breakout cable	80553
18	Field-IQ to Dickey-John Encoder/Flowmeter	80539
19	Field-IQ, spreader gate height and spinner speed adapter cable	80507
20	Flow control adapter cable	
A	▸ Field-IQ to Raven Fast Valve	80534
B	▸ Field-IQ to Raven control valve adapter	80586
C	▸ Dickey-John PWM control valve adapter (2 pin)	80960

- If the optional Field-IQ Master switch box (**10**) is not used, connect **R1** of the CAN to Hitch cable (**11**) to **P1** of Cable Assy, GFX, Field-IQ, Active CAN terminator (**8**)
- **Highlighted** items are **included** in the kit

PTx Trimble

Field-IQ Spreader
Rate and Section Control

99105-12

Montag Dry Fertilizer Applicator

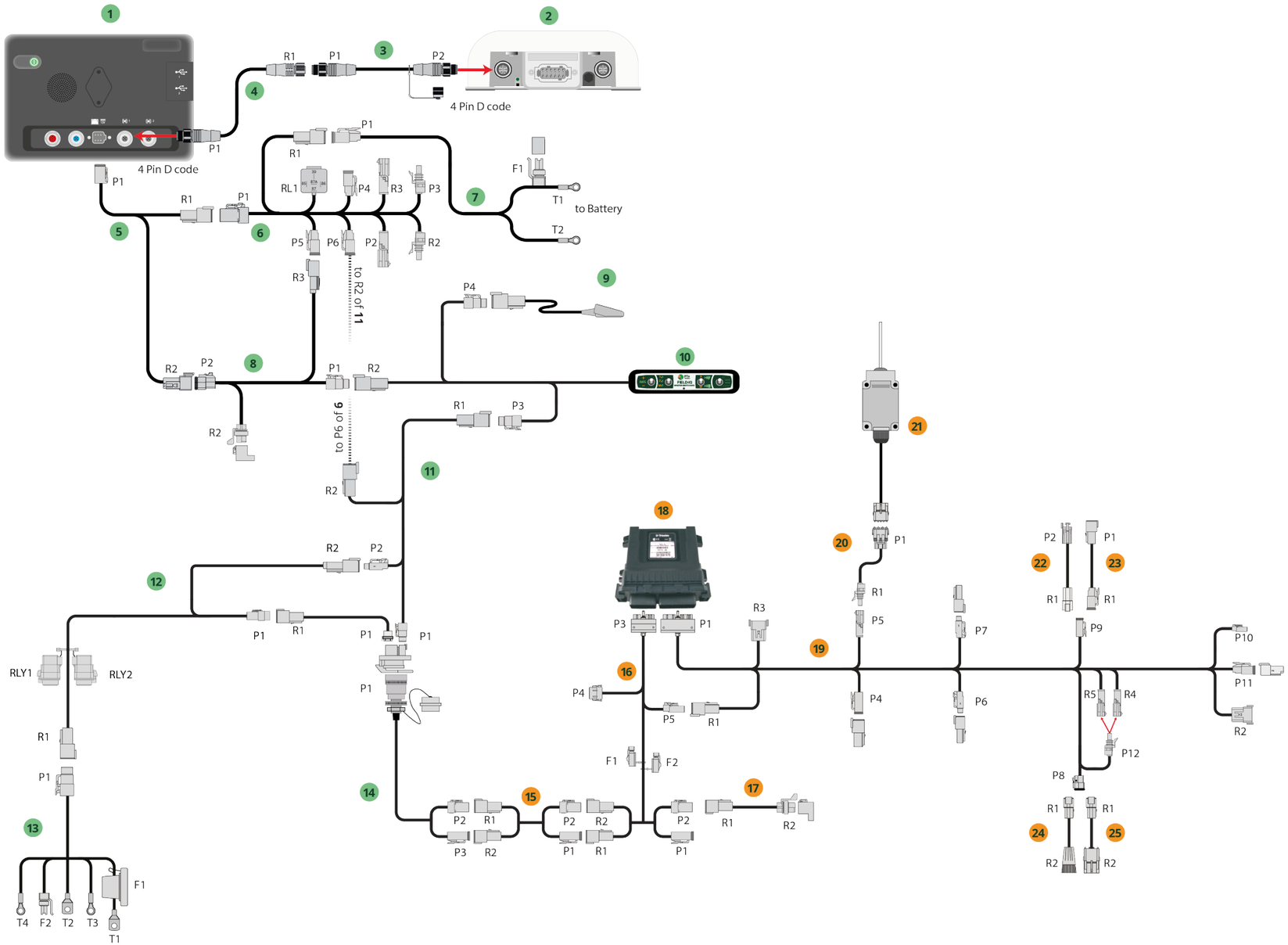

GFX Display System Cabling

Item	Description	P/N
1	GFX series displays with PIQ app	
2	NAV-900 or NAV-960 guidance controller	
3	Cable Assy, GFX to NAV-500/900, Power/Ethernet (BRR), 5 m	110540
4	Cable Assy, GFX to NAV-500/900, Power/Ethernet (BRR) Extension, 2.5 m. Optional extension for large vehicles.	112082
5	Cable Assy, GFX, Power to display, CAN, 2.5 m	110551
6	Cable Assy, GFX/CFX/FMX Power with Relay and Switch (Acc)	67259
7	Cable Assy, GFX/CFX/FMX/Basic Power, 4 m	67258
8	Cable Assy, GFX, Field-IQ, Active CAN terminator	111083
9	*Optional:* Foot Switch	78150

Field-IQ Spreader Cabling (99105-12)

Item	Description	P/N
10	*Optional:* Field-IQ Master switch box	80800-00
11	Cab to hitch CAN cable	77368
12	*Optional:* Powell quick disconnect (tractor side)	77413
13	Power to cab cable	76941
14	*Optional:* Implement harness (Powell adapter) (implement side)	77611-01
15	CAN/Power extension cable	75528-xx
16	Cable assembly, rate/section module tee	75526
17	CAN terminator	75529
18	Rate and Section Control Module	75774-01
19	Field-IQ rate and section implement adaptor with 12 V switched	85061
20	Cable Assy, Implement Switch, 25 ft.	77542
21	Switch, Whisker with 3-pin Weatherpack	77636
22	Field-IQ to Montag PWM Valve	86298
23	Field-IQ to Case IH/Kinze PWM	82919
24	Field-IQ Raven Flowmeter adapter	80584
25	Field-IQ to Dickey-John Encoder/Flowmeter	80539

- If the optional Field-IQ Master switch box (**10**) is not used, connect **R1** of the CAN to Hitch cable (**11**) to **P1** of Cable Assy, GFX, Field-IQ, Active CAN terminator (**8**)
- **Highlighted** items are **included** in the kit

PTx Trimble

Field-IQ Spreader
Rate and Section Control

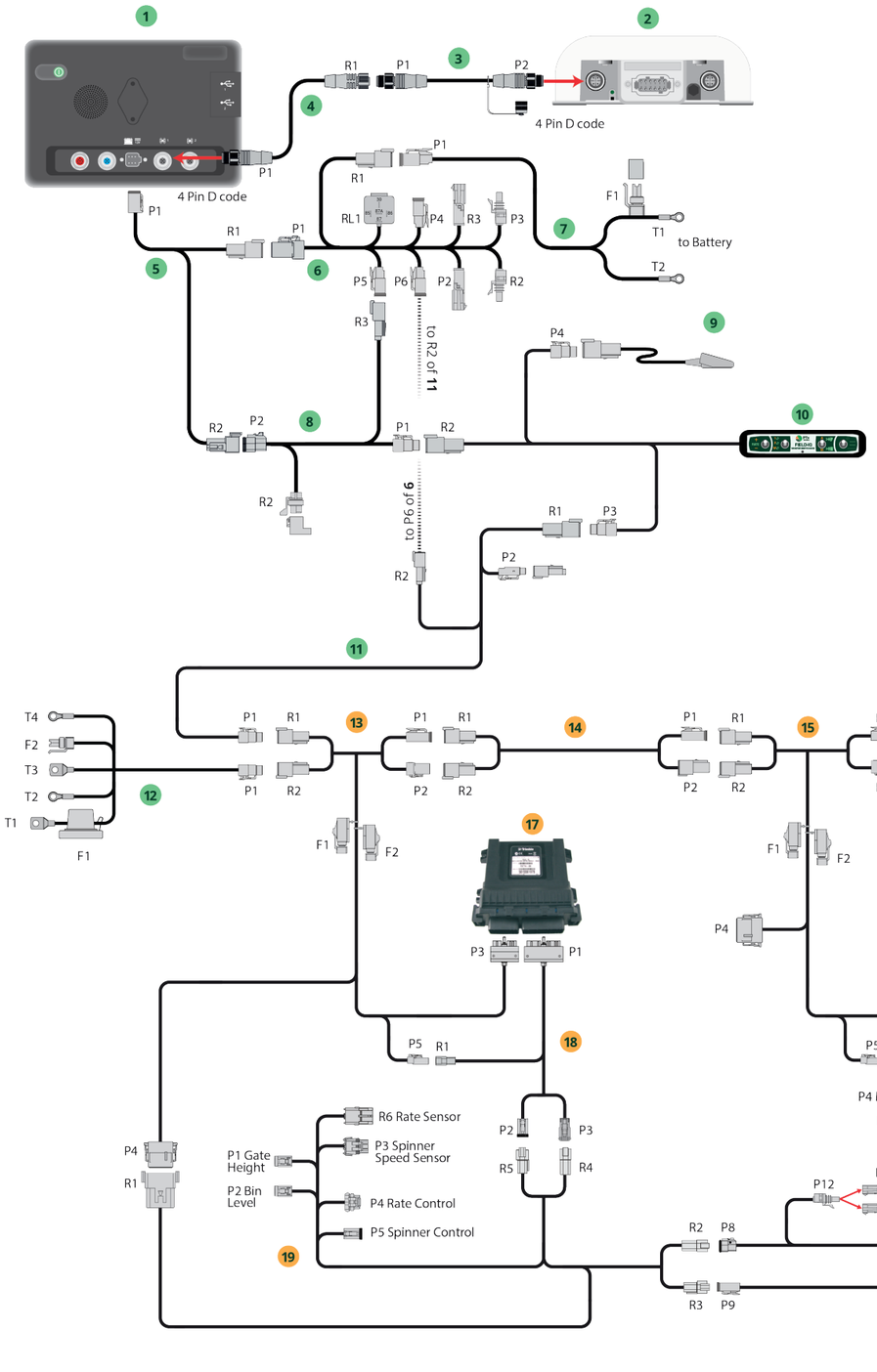

99105-14
New Leader
Full Harness/Pull-Type Spreader

GFX Display System Cabling

Item	Description	P/N
1	GFX series displays with PIQ app	
2	NAV-900 or NAV-960 guidance controller	
3	Cable Assy, GFX to NAV-500/900, Power/Ethernet (BRR), 5 m	110540
4	Cable Assy, GFX to NAV-500/900, Power/Ethernet (BRR) Extension, 2.5 m. Optional extension for large vehicles.	112082
5	Cable Assy, GFX, Power to display, CAN, 2.5 m	110551
6	Cable Assy, GFX/CFX/FMX Power with Relay and Switch (Acc)	67259
7	Cable Assy, GFX/CFX/FMX/Basic Power, 4 m	67258
8	Cable Assy, GFX, Field-IQ, Active CAN terminator	111083
9	*Optional:* Foot Switch	78150

Field-IQ Spreader Cabling (99105-14)

Item	Description	P/N
10	*Optional:* Field-IQ Master switch box	80800-00
11	Cab to Hitch CAN cable	77368
12	Power to cab cable	76941
13	Cable Assy, module tee	75526
14	CAN/Power extension cable	75528-xx
15	Cable Assy, module tee	75526
16	Field-IQ implement terminator adapter	75529
17	Rate and Section Control Modules	75774-01
18	Field-IQ universal spreader breakout cable	80553
19	New Leader rate, gate height, and bin level adapter	86715
20	Field-IQ rate and section implement adapter with 12 V switched	85061

- If the optional Field-IQ Master switch box (**10**) is not used, connect **R1** of the Cab to Hitch CAN cable (**11**) to **P1** of Cable Assy, GFX, Field-IQ, Active CAN terminator (**8**)
- **Highlighted** items are **included** in the kit

Field-IQ Spreader
Rate and Section Control

99105-15

New Leader
Self-Propelled Spreader

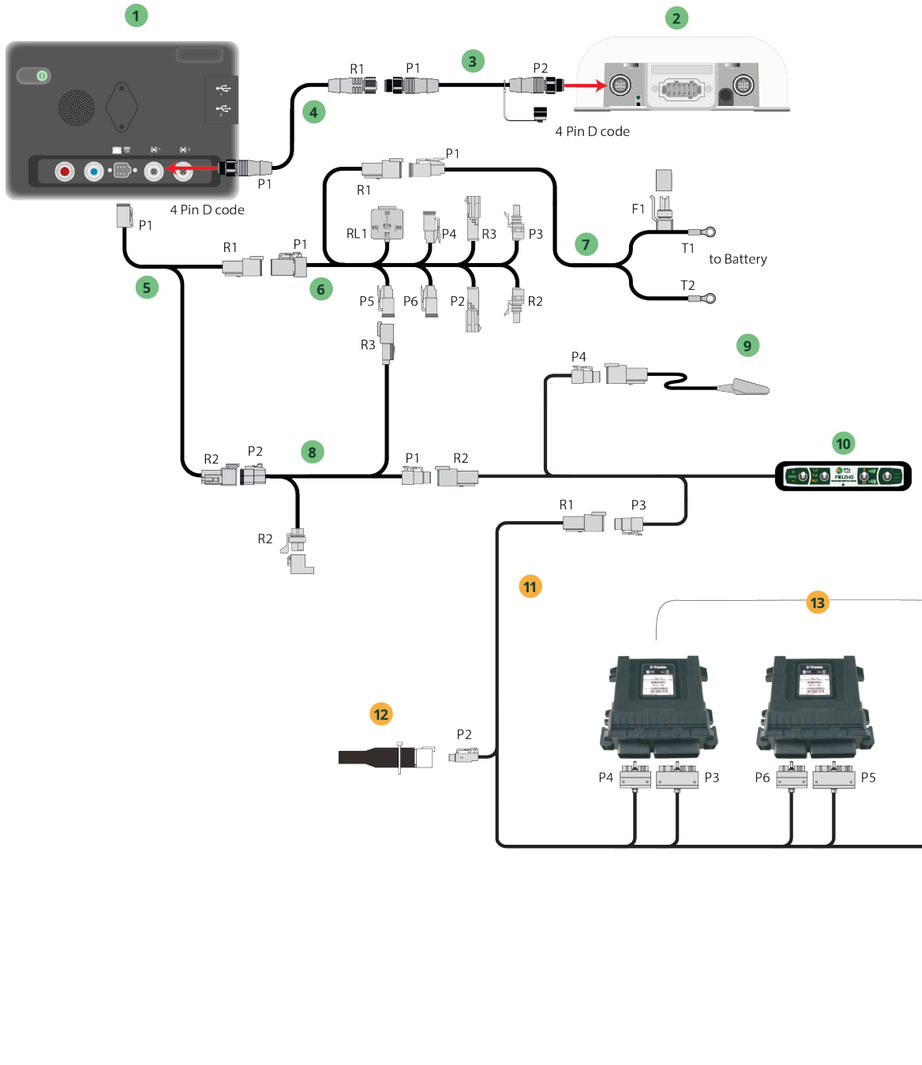

GFX Display System Cabling

Item	Description	P/N
1	GFX series displays with PIQ app	
2	NAV-900 or NAV-960 guidance controller	
3	Cable Assy, GFX to NAV-500/900, Power/Ethernet (BRR), 5 m	110540
4	Cable Assy, GFX to NAV-500/900, Power/Ethernet (BRR) Extension, 2.5 m. Optional extension for large vehicles.	112082
5	Cable Assy, GFX, Power to display, CAN, 2.5 m	110551
6	Cable Assy, GFX/CFX/FMX Power with Relay and Switch (Acc)	67259
7	Cable Assy, GFX/CFX/FMX/Basic Power, 4 m	67258
8	Cable Assy, GFX, Field-IQ, Active CAN terminator	111083
9	*Optional:* Foot Switch	78150

Field-IQ Spreader Cabling (99105-15)

Item	Description	P/N
10	*Optional:* Field-IQ Master switch box	80800-00
11	New Leader cab cable	86878
12	CAN terminator	59783
13	Rate and Section Control Modules	75774-01
14	New Leader chassis cable	86879

- If the optional Field-IQ Master switch box (**10**) is not used, connect **R1** of the New Leader cab cable (**11**) to **P1** of Cable Assy, GFX, Field-IQ, Active CAN terminator (**8**)
- **Highlighted** items are **included** in the kit