

FarmTRX™



Tired of wrestling with the factory monitor?

FarmTRX is an affordable, retrofit yield monitor that installs on any combine with a clean grain elevator.

HOW IT WORKS

Installation—FarmTRX sensors use optical technology to measure grain volume in the elevator. Installation of the system is a 2-4 hour process completed by the end-user.

Harvest—Once powered, yield data collection on the combine is fully automated. The monitor is always recording relative yield difference during harvest.

Sync—Data transfer from the yield monitor is completely wireless. Sync data from the ECU to your mobile device using the free FarmTRX app and upload over WiFi or by using mobile data.

Review—Evaluate yield data online with multiple map types and reports. The Web App automatically sorts, cleans and corrects yield data and processes it into agronomy-ready yield maps. If you don't want maps, access to your raw yield data is free and unlimited.

COMPONENTS

1. Yield Monitor ECU
2. Moisture Sensor
3. Drill Guide, Bits and Extension
4. Optical Sensors and QuickConnect™ Mounting System
5. External Antenna
6. FarmTRX Display with charging station and mount

Included, Not Pictured

- Electrical T-Splice Connectors
- Zip Ties
- CAN capable wiring and harnesses



6.

3.





5.

1.



2.



4.



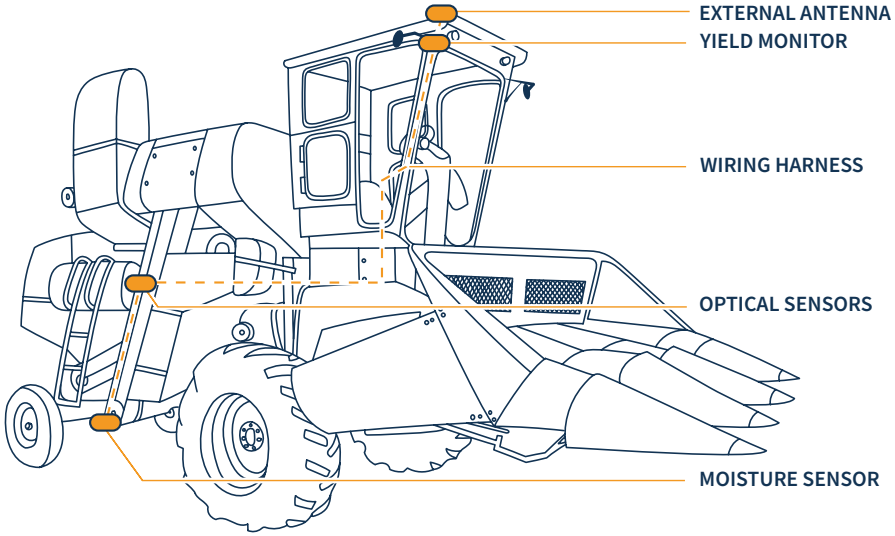

External Antenna—The external antenna is connected to the Yield Monitor via an SMA connector and mounts on the roof of the cab in the centerline of the combine.

Yield Monitor ECU—The Yield Monitor installs in the cab of the combine and needs to be wired into switched 12V power.

Wiring Harness—CAN capable wiring connects the Yield Monitor in the cab to the optical sensors and Moisture Sensor installed on the clean grain elevator.

Optical Sensors—QuickConnect™ mounting technology allows the installer to quickly and easily drill holes of equal height on the clean grain elevator for correct installation of the optical sensors.

Moisture Sensor—The Moisture Sensor installs on the elevator clean-out hatch door and records live and average grain moisture.





YIELD MONITOR—HOW IT WORKS

A transmitter and receiver sensor are installed across from each other on the up-side of the clean grain elevator. An optical beam is transmitted between them. Sensor blocked time is used to measure yield volume during harvest.

SENSOR AND CROP CALIBRATION

Perform a pre-harvest sensor calibration to measure the elevator paddle width of the combine. During harvest, perform a crop calibration for each new crop type using a volume or weight measurement.



YIELD DATA COMPATABILITY

In the Web App, 2-way API integration with John Deere Operations Center™ and Trimble® Ag Software is available.

Send yield data directly into FieldView™ Cab App using the FarmTRX to FieldView Drive Adapter Cable.

PTx Trimble

CLIMATE FIELDVIEW

JOHN DEERE OPERATIONS CENTER™ CONNECTED

MOISTURE SENSOR INSTALLATION

The Moisture Sensor features an ultra-durable ceramic sensor face and stainless steel flange. It installs in the hatch door of the clean grain elevator where grain flow is consistent without buildup. The Moisture Sensor is powered by the Yield Monitor and delivers instant and average moisture measurements viewable in the mobile app during harvest.

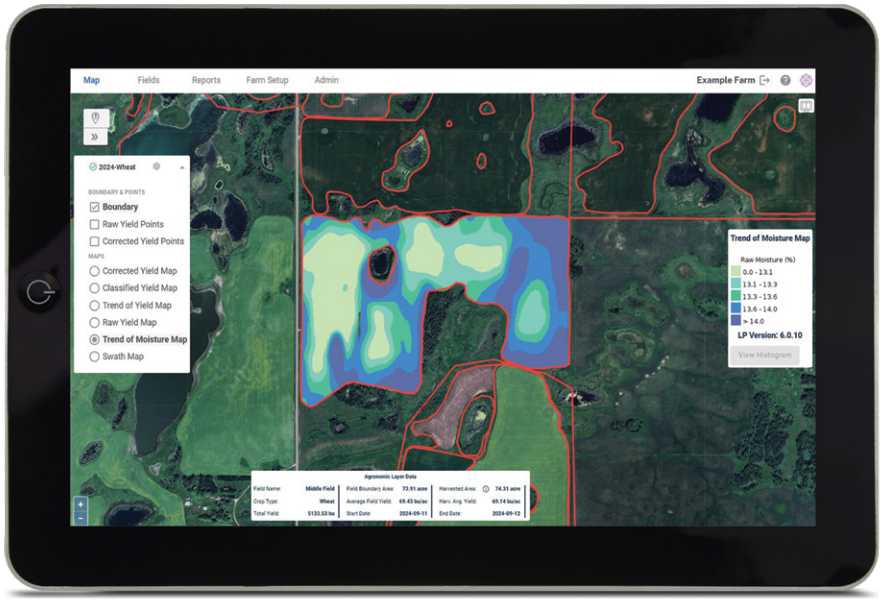

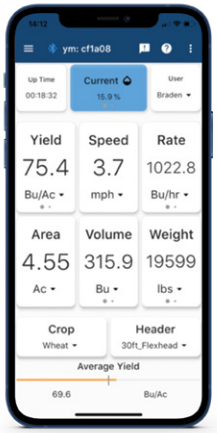

SETTING UP THE IN-CAB EXPERIENCE

1. **Install the FarmTRX Harvest App on Your Mobile Device or FarmTRX Tablet:** The app is available for Android or iOS devices. Verify that your smartphone or tablet is up-to-date and compatible.

2. **Connect Your Device to the Yield Monitor:** Connect to the Yield Monitor via Bluetooth® in the mobile app. The LED on the monitor will flash blue during connection and green once connection is successful.

3. **Add Headers, Crops and Calibrate Sensors:** Calibrate sensors once per season or after performing elevator maintenance.

4. **Harvest:** Begin harvesting! Yield data is recorded by the Yield Monitor and displayed through the mobile app. To get accurate live yield readings in the cab, calibrate once per crop type or variety. If calibration cannot be completed in-field during harvest, yield data will still be recorded and can be calibrated through the Web App post-harvest.

5. **Upload Yield Data and Sync to the Web App:** Sync yield data from the ECU to your device, and upload to the Web App wirelessly over WiFi or cellular data. Maps are processed in the Web App immediately after upload!



AUTOMATED YIELD MAPPING

Automated yield data correction and map processing is included for every customer for the first year after initial purchase. After one year, the farmer chooses whether to renew automated mapping or use the free version. The cost to renew is based on the number of harvested acres in the account and is paid annually.

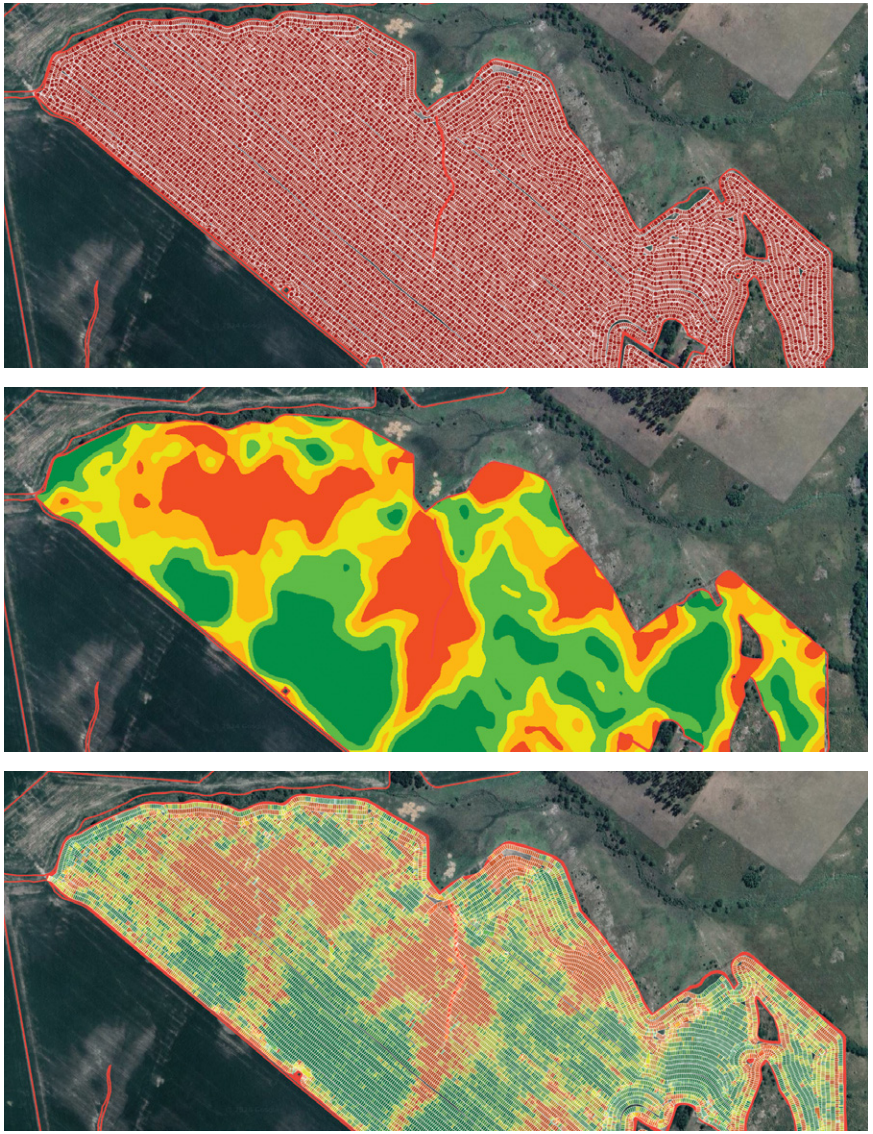

Raw Yield Points, Trend of Yield Map and Swath Map (soybean field)

FarmTRX™

www.farmtrx.com