

FarmTRX™

Yield Monitor Pro

Installation Guide

GUIDE CONTENTS

System Overview 2

Components 4

Tools Required 4

1. Optical Sensor Installation—Part One 5

    1.1 Measuring and Marking Sensor Location 6

    1.2 Installing QuickConnect Sensors 11

2. In-Cab Installation 12

    2.1 Electronic Control Unit Installation 13

    2.2 Mounting the Antenna 15

    2.3 Routing the Wiring Harnesses 18

3. Optical Sensor Installation—Part Two 19

Testing the Yield Monitor 22

Support and Next Steps 22

Interpreting the Yield Monitor ECU LEDs 23

Troubleshooting the Yield Monitor ECU LEDs 23

Notes 24

This guide demonstrates the installation of a FarmTRX Yield Monitor Pro on a combine harvester. The installation process typically requires 2-4 hours and can be completed on any combine make or model with a clean grain elevator.

To enhance reading, we suggest pairing this guide with the Yield Monitor QuickConnect installation video found on the FarmTRX YouTube channel.

System Overview

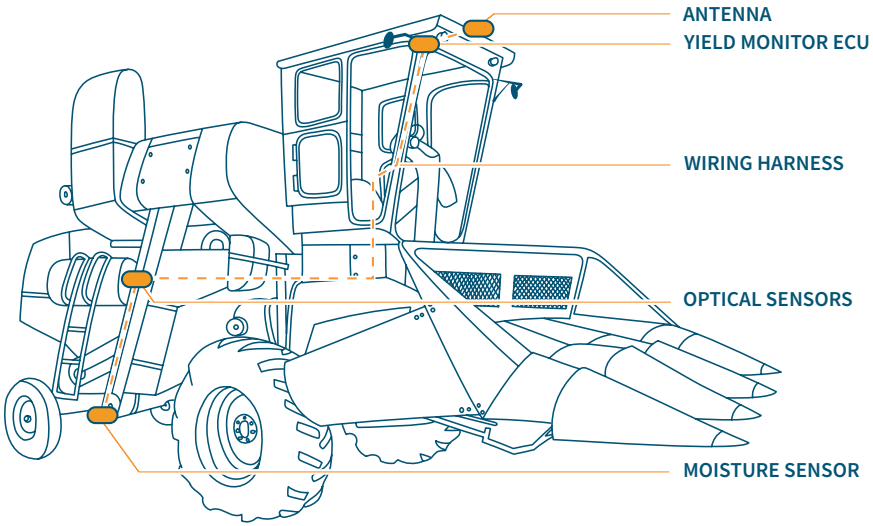

External Antenna:

The External Antenna is mounted on the roof of the cab in the centerline of the wheelbase of the combine. The antenna connects to the Yield Monitor ECU via TNC connector

Yield Monitor Electronic Control Unit (ECU):

The Yield Monitor ECU is wired into 12V switched power and connects to the optical sensors and Moisture Sensor via the supplied harnesses.

Optical Sensors:

Two sensors install on either side of the clean grain elevator: an emitter and a receiver. A light beam is sent between the two sensors, with blocked time measuring grain volume on each paddle.

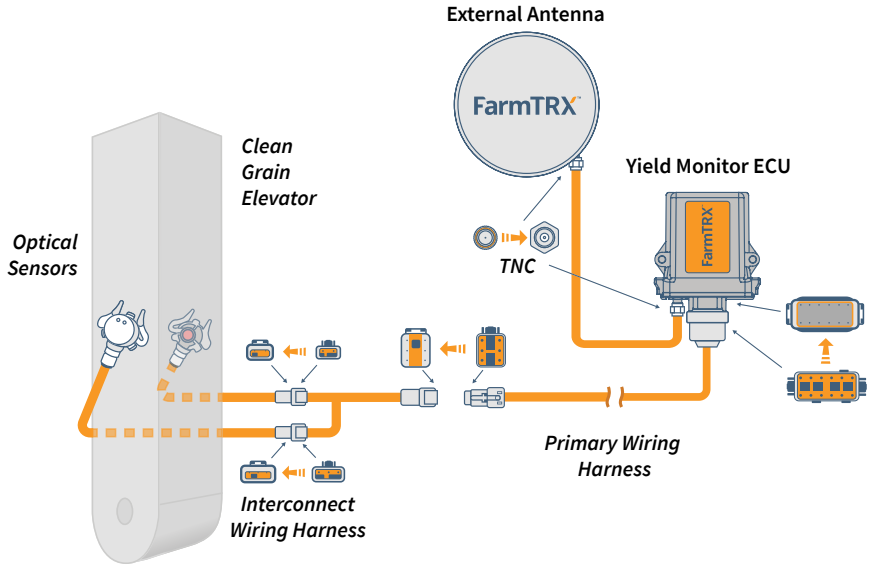

Components Layout

Components

1. Yield Monitor ECU
2. External Antenna
3. 3 m (10 ft) Primary Wiring Harness
4. 6 m (20 ft) Sensor Interconnect Wiring Harness
5. Drill Guide Kit
6. QuickConnect Mounting Plates (2)
7. Assembled QuickConnect Optical Sensors and Mounts (2)
8. Antenna Wire

Tools Required

- Power Drill
- Pliers, Vice Grips, or Side Cutters
- Center Punch
- Measuring Tape
- Marker, Pen, or Pencil
- Flat Head Screwdriver
- Masking Tape
- Round Bastard File (optional)

Not Pictured:

- Zip Ties
- Alcohol Wipes

1.



2.



5.



3.



4.



6.



7.



8.



1. Optical Sensor Installation—Part One

Two optical sensors are included with the Yield Monitor. The 2-wire sensor is an emitter, and the 3-wire sensor is a receiver. 2 LED lights appear on the body of the receiver sensor. The placement of the optical sensors should meet the following criteria:

1. Sensors should be installed as high up the clean grain elevator as reasonably possible, to reduce noise of grain falling off the paddles, in a place where the inside and outside of the elevator can be accessed. Sensor location should be out of the way of belts or other moving parts of the combine. **This is typically two-thirds of the way up the elevator before entering the grain tank.**
2. Sensors should be centered on the paddles of the elevator chain. Some elevator chains have brackets supporting the paddles which can interfere with the sensor beam. If this is the case, adjust the sensor location outwards to avoid the brackets. Refer to the diagrams on page 7 for examples.

Please refer to the Drilling Measurements Table on page 6 for sensor placement measurement specifications on several combine makes and models. If your combine is not found in the table, please select an appropriate sensor location based on the above two steps.

Components used in this step:



Sensor Interconnect Wiring Harness



QuickConnect Mounting Plate



Optical Sensors



QuickConnect Drill Guide



Drill Guide Kit

1.1 Measuring and Marking Sensor Location

Measure and mark where to drill holes for the sensors on the clean grain elevator. On the upwards direction, the sensors will mount on the inside and outside face of the elevator (where filled paddles of grain pass by). The Drilling Measurements Table below displays the measurements for common combines:

Combine	Model	Distance X (in)	Height Y (in)
Case IH	1660	1.75 in (45 mm)	41.5 in (1054 mm)
	1680	1.75 in (45 mm)	75.5 in (1917 mm)
	2X88*	1.75 in (45 mm)	75.5 in (1917 mm)
	7088	1.75 in (45 mm)	75.5 in (1917 mm)
	7120/8120	1.5 in (38 mm)	57 in (1448 mm)
New Holland	CR/CX X00, CR/CX X000	1.75 in (45 mm)	62 in (1575 mm)
	TR9X	1.5 in (38 mm)	43 in (1092 mm)
John Deere	9500	2.25 in (57 mm)	62 in (1575 mm)
	96X0	2.25 in (57 mm)	62 in (1575 mm)
	9X50	2.25 in (57 mm)	62 in (1575 mm)
	9X60	2.25 in (57 mm)	62 in (1575 mm)
	9X70	2.25 in (57 mm)	62 in (1575 mm)
Gleaner	R Series L/M Series	2.125 in (54mm) 1.25 in (32 mm)	56 in (1422 mm) 48 in (1220 mm)
Challenger	670	1.5 in (38 mm)	70 in (1778 mm)
	670B	1.75 in (44.45 mm)	65 in (1651 mm)

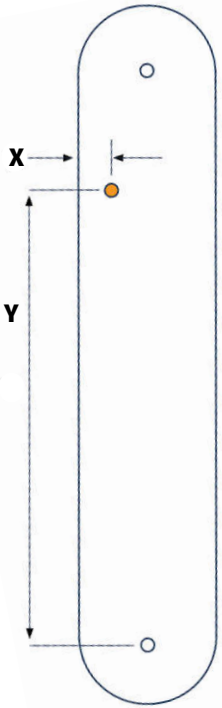

** Specific models of Case IH combines may require moving the sensor location to avoid a tensioner rod. If you have specific questions for this model please contact your FarmTRX Support Team.*

If your model is not shown in the Drilling Measurements Table, remember the main principles for successful sensor installation:

1. Choose a sensor location that is as high on the clean grain elevator as reasonably possible.
2. Place sensors centered on the paddles of the elevator chain.

The key to achieving accurate results is to make sure the optical sensors are only measuring variation in grain on top of each paddle. When measuring for the Distance (X), note if the combine elevator chain has a style of paddle-supporting bracket that partially obstructs the sightline between the transmitter and receiver optical sensor inside the elevator. If the intended drill location places the sensor in line with an **edge** or **angle** of a paddle-supporting bracket, move the drill location towards or away from the elevator chain to avoid the sloped or angled paddle feature.

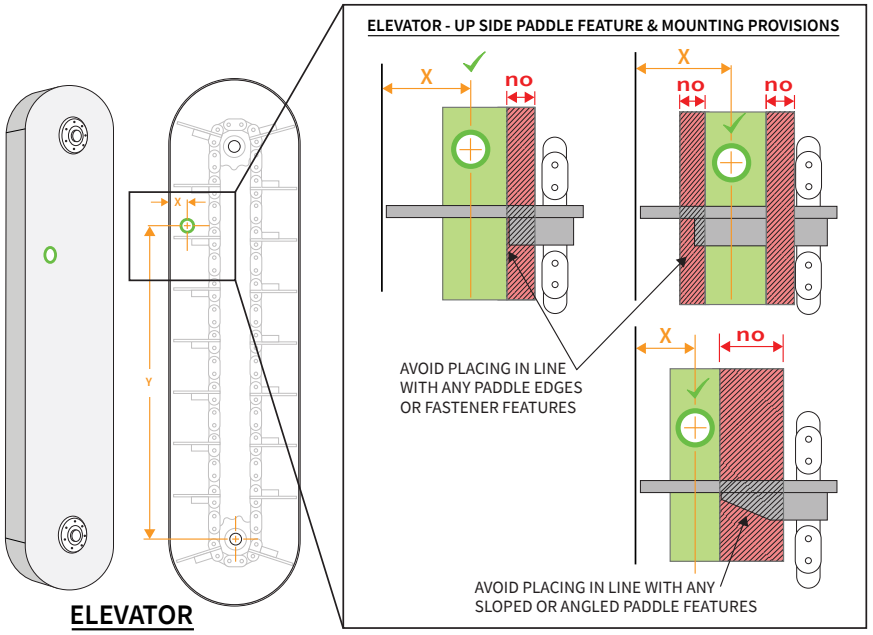

Note:
At this stage, it is important to confirm the elevator chain and paddles are in good shape. If the chain is loose, or has paddles that are worn down or missing, the quality and accuracy of yield readings will be negatively affected.

1. Measure and mark the Height (Y) for the drill location. Measure from the center of the elevator bearing and mark using masking tape. Use a framing square to trace the Height (Y) across the masking tape on the clean grain elevator.



Height (Y) from the center of the bearing to the center of the drill hole

2. With the Height (Y) marked, measure and mark the Distance (X).

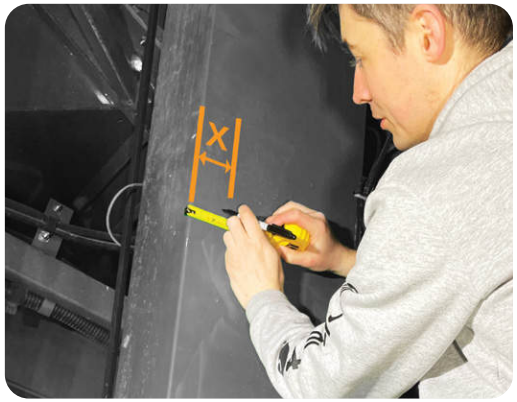

Distance (X) from the back of the clean grain elevator to the center of the drill hole

Note:

As stated above, it is not critical to follow the measurements table. As long as the sensors are mounted high up on the elevator while centered on the paddles, you will receive accurate results.

3. At the marked location, use a center punch to mark the drilling location.



4. Drill a pilot hole using the provided pilot hole drill bit.



5. Transfer to the provided step drill bit and drill an 18 mm (3/4”) hole.



Step drill bit

6. Use a file to remove any sharp burrs from the hole.

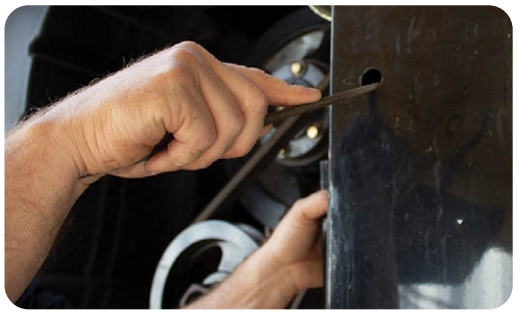

7. **IMPORTANT:** Use one of the provided alcohol wipes to thoroughly clean the area around the drilled hole, ensuring all oil, grease, and residue are completely removed from the elevator face.

   Let the alcohol evaporate completely.

   If any oxidized paint is present near the hole, use a household cleaning product to thoroughly clean and prep the area prior to using the alcohol wipe.

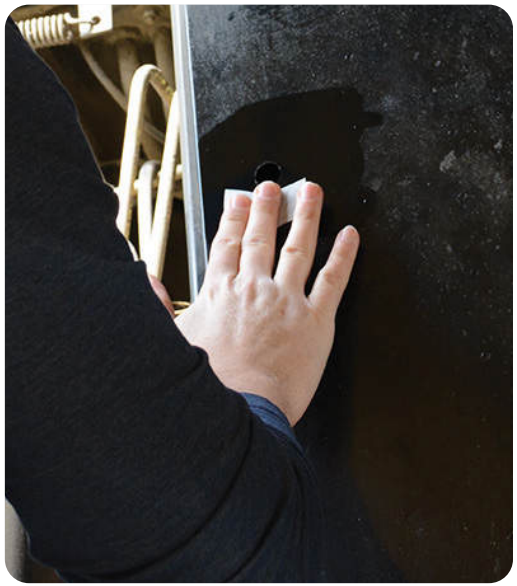

8. Using a flashlight, look into the elevator to ensure there is no paddle directly behind the drilled hole. If there is a paddle in the way, advance the elevator chain until the space behind the hole is clear.

Note:
The Sensor Mounting Plates require a clean surface to properly cure to the elevator wall.

1.2 Installing QuickConnect Sensors

9. After ensuring the area around the drilled hole is clean and dry, remove the VHB backing on the adhesive side of one Mounting Plate and insert the Drill Guide into the Mounting Plate. Turn the Drill Guide clockwise to secure it in the Mounting Plate.



Adhesive backing removed



Drill Guide Inserted

10. Align the Drill Guide with the hole and press the plate firmly against the side of the elevator, holding for 15 seconds minimum. Bond strength is improved by good pressure and ideally applied at 21°C (70°F) or greater. Minimum temperature for application is 10°C (50°F).



11. Leave the Mounting Plate and the Drill Guide in place on the elevator to allow the adhesive bond to cure.



Note: Following the sequence of the steps below ensures ample time for the Mounting Plate to fix to the elevator wall before the Drill Guide is removed. If preferred, wait 5 minutes after application of the Mounting Plate and continue with installation of the second optical sensor (page 19).

2. In-Cab Installation

Installation of the Yield Monitor ECU in the combine cab can vary from harvester to harvester. The ECU is powered by 12V switched power and draws less than 1 Amp of current, so splicing into the radio line is acceptable. Installers are encouraged to make placement decision based on preference and first-hand knowledge of the machine. This guide will outline best-practices to ensure accurate readings.

Components used in this step:



Yield Monitor ECU



Primary Wiring Harness



External Antenna



Antenna Wire



T-Splice Connectors

2.1 Electronic Control Unit Installation

1. Remove any headliner panels or lights needed to access 12V switched power and create a free space to install the Yield Monitor.
2. Use the supplied T-Splice Connectors to connect to +12V and Ground. Use pliers to snap the T-Splice Connectors onto the wires. Be sure to use the correct size connector and ensure the connector “snaps” shut.
    - Use the Blue T-Splice connector for 18-14 AWG wire
    - Use the Red T-Splice connector for 22-18 AWG wire
3. With the T-Splice connectors attached to 12V switched power, attach the Red spade connector from the lead on the Primary Wiring Harness to +12V and the Black spade connector to Ground.

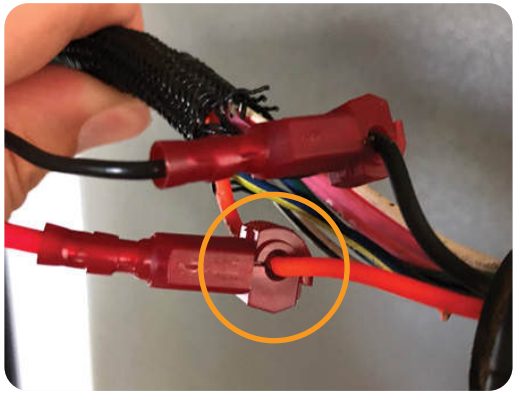

Note: It is important to ensure there is full engagement between the spade and T-Splice connectors. If connectors are not fully pressed together there is risk of intermittent power supply. Intermittent power supply or poor grounding may result in frequent Bluetooth© disconnection and missing field data.

4. Connect the 12 pin Deutsch connector of the Primary Wiring Harness to the Yield Monitor ECU.
5. Mount the Yield Monitor ECU in a safe, dry, and dust free location inside the combine cab.

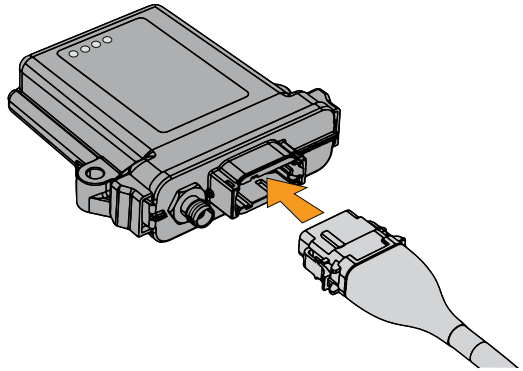



Yield Monitor ECU connection

2.2 Mounting the Antenna

For best results with mapping, the Antenna will mount at the front of the roof of the combine cab along the centerline of the combine. Refer to the diagram below for placement:

Note:
The Antenna is secured to the mounting plate using strong magnets. Take care if/when removing the mounting plate from the Antenna to avoid pinching.

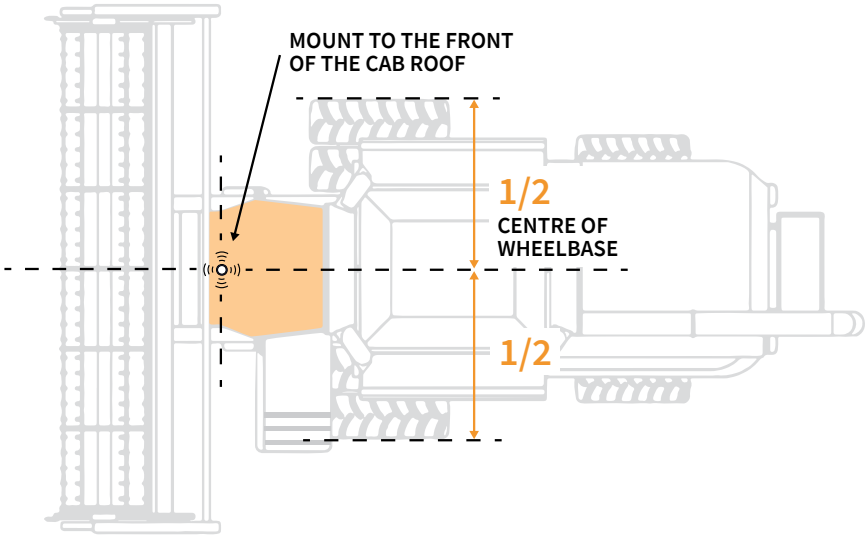

1. If the cab is centered on the combine, the Antenna can be mounted on the centerline of the cab. If the cab is off-centre, locate the centreline of the combine by measuring the halfway point between the wheels.

2. Prepare the surface of the cab roof by wiping the mounting location to remove dust. Once dust is removed, use the provided isopropyl alcohol wipes to clean the location.



3. Remove the red VHB backing from the Antenna mounting plate (Antenna and mounting plate remain attached).



4. Place the attached Antenna and mounting plate onto the roof of the cab at the marked location and press down firmly. The VHB adhesive requires strong pressure to activate the bond. Press for a minimum of 5 seconds.



5. Leave the mounting plate and Antenna attached to the roof for a minimum of 30 seconds to ensure good adhesion. After 30 seconds, the Antenna may be removed from the mounting plate.

6. Attach the Antenna wire by threading onto the main connector. Place the Antenna back on to the mounting plate.



7. Route the Antenna wire into the combine cab at a location that avoids pinching and/or chafing. The preferred entry point is the same point of access used for the Primary Wiring Harness to exit the cab. To avoid wire damage, do not pinch the wire in a door frame.

8. Once routed into the cab, secure the Antenna wire to the roof using the provided cable tie anchors.

9. Thread the Antenna wire connector onto the Yield Monitor ECU.



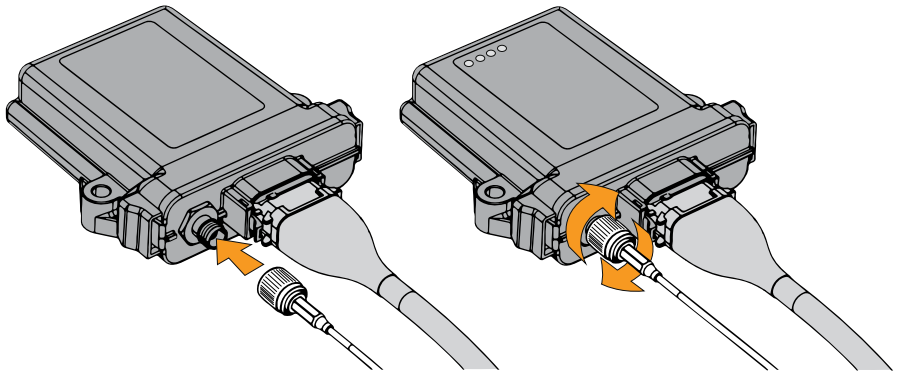

2.3 Routing the Wiring Harnesses

1. Once the Yield Monitor ECU is mounted, the Primary Wiring Harness will need to be routed outside of the cab and towards the clean grain elevator. The Wiring Harness can exit at the base of a window if the seal allows, at an existing wiring grommet, or by drilling a new location.



In this install, the harness is routed outside of the cab via a bulkhead below the operator's chair.

2. At the selected location, pull the Primary Wiring Harness outside of the combine cab.
3. Attach the Primary Wiring Harness to the Interconnect Wiring Harness using the Deutsch connector.
4. Route the harness alongside the main combine harness bundle to the clean grain elevator.

Note:
It is recommended to use the main wiring path of the combine when routing the harness to **avoid moving parts of the combine and damage to the harness.**

3. Optical Sensor Installation—Part Two

Components used in this step:

Use the same components as in Step 1 (pages 5-10).

1. Returning to the elevator, turn the Drill Guide counterclockwise to remove from the Mounting Plate.



2. Put the Drill Guide onto the 30 cm (12") drill extension and put into drill. Attach the provided pilot hole drill bit.

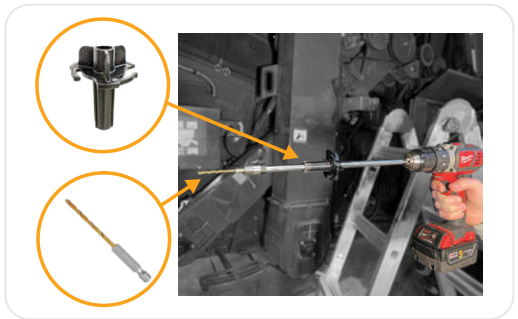

3. Insert the Drill Guide into the Mounting Plate and turn clockwise to secure in place. This will ensure straight alignment of the drill. Proceed to drill a hole into the back wall of the elevator.

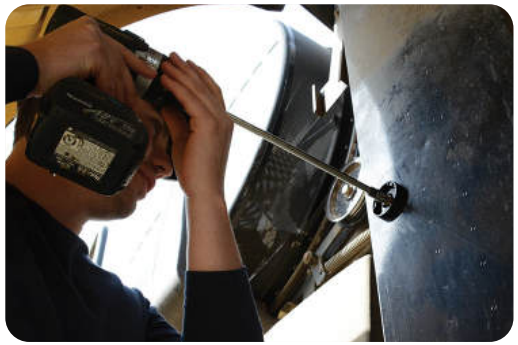

4. Turn the Drill Guide counterclockwise to remove from the Mounting Plate. Remove the pilot drill bit and replace with the step drill bit.

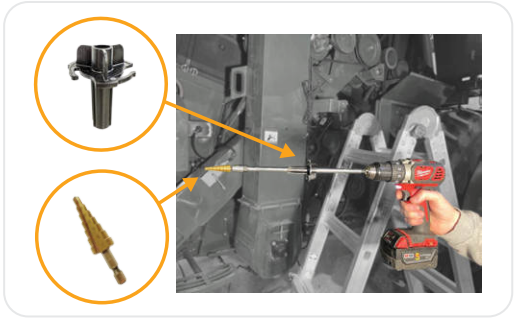

5. Carefully align the tip of the step drill bit with the pilot hole in the back elevator wall. Once the tip of the drill bit is engaged, drill all the way through the wall.

6. Remove the drill and Drill Guide from the Mounting Plate. Use a provided alcohol swab to thoroughly clean the area around the drilled hole. Ensure all oil, grease, and residue are completely removed from the elevator face.



7. Remove the backing on the adhesive side of the second Mounting Plate and insert the Drill Guide into the Plate. Turn the Drill Guide clockwise to lock into place.
8. Align the Drill Guide with the hole and press firmly against the side of the elevator, pushing consistently for 15 seconds.
9. Leave in place to cure for at least five minutes, then remove the Drill Guide.



Adhesive backing removed



Inserted Drill Guide

10. Insert both sensors into the Mounting Plates and turn clockwise to lock into place. The Receiver sensor (2 LEDs) should face outward on the elevator.

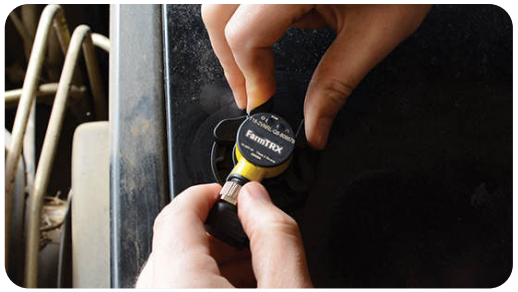

Front of elevator



Back of elevator

11. Connect the optical sensors to the Interconnect Wiring Harness.
12. Ensure all wire harnesses are tightly secured and out of the way of moving parts of the combine.



IMPORTANT:

If the wires have been removed from the optical sensors, plug the 2-wire harness (2-pin Deutsch connector) into the Emitter sensor (1 LED), and the 3-wire harness (3 pin Deutsch connector) into the Receiver sensor (2 LEDs).

Testing the Yield Monitor

Once the optical sensors are installed and connected to the Yield Monitor, the system can be tested in the following ways:

1. Power on the harvester. This should power on the Yield Monitor wired to switched 12V power.
2. To test power: The Yield Monitor ECU status LED will go through a blink sequence as it powers on. If receiving power, status LEDs will illuminate.

   For more information on interpreting the status LEDs of the Yield Monitor ECU, refer to the diagrams in the Appendix.
3. Test the optical sensors. With the harvester powered on (the engine does not need to be running for this), check the status LEDs of the optical sensors using the Troubleshooting guide on page 23.

Support and Next Steps

Congratulations, your Yield Monitor is now fully installed and ready to use. You are ready to move onto the two steps below.

1. Set up the FarmTRX Harvest App on an Apple iOS or Android device, or the FarmTRX Display.
2. Register for your Web App account at web.farmtrx.app. If your farm is located in Europe or Africa, register at eu.farmtrx.app.

Interpreting the Yield Monitor ECU LEDs



Troubleshooting the Yield Monitor ECU LEDs

STATE	COLOUR	FLASH
Yield		
READY	Blue	Solid
RECORDING YIELD DATA	Green	Solid
GPS		
NO SATELLITES/FIX	Red	Solid
2D FIX	Yellow	Solid
3D FIX	Green	Solid
PPP CONVERGING	Green/Blue	Flashing
PPP FIX	Blue	Solid
RTK FLOAT	Green/Purple	Flashing
RTK FIX	Purple	Solid
CANBUS		
FAULT	Red	Solid
WARNING	Yellow	Solid
OK	Green	Solid
Comms		
NO BLUETOOTH® CONNECTION	Off	Solid
BLUETOOTH® IS CONNECTED	Blue	Solid

NOTES:

FarmTRX™

www.farmtrx.com